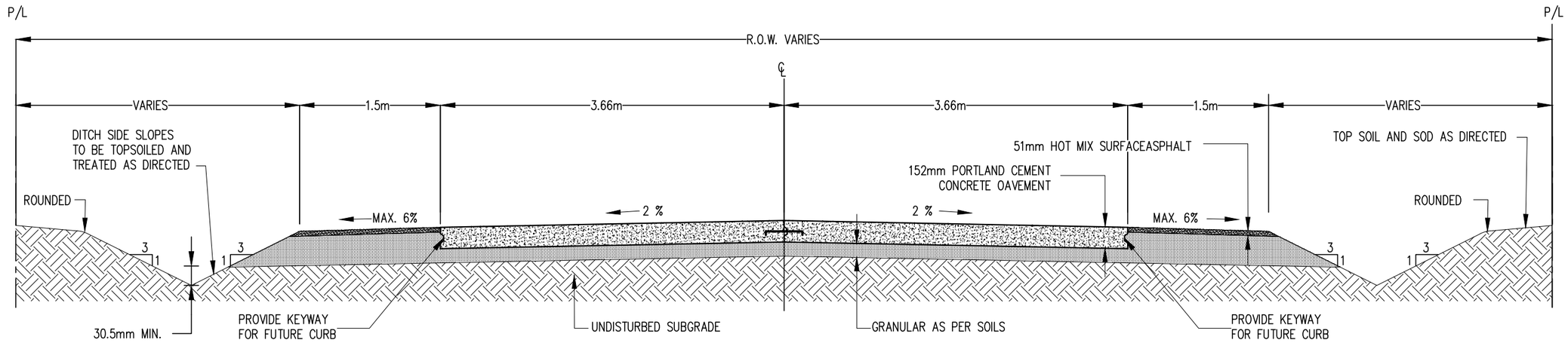

TYPICAL CROSS SECTION

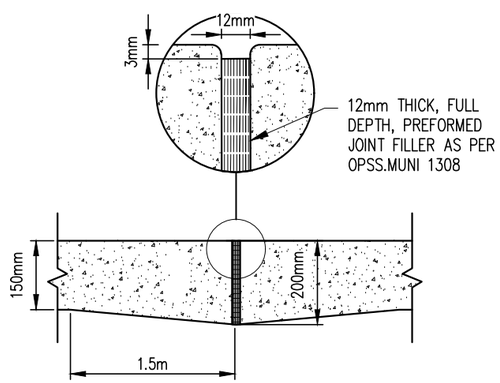

TYPE A
TRANSVERSE EXPANSION JOINT

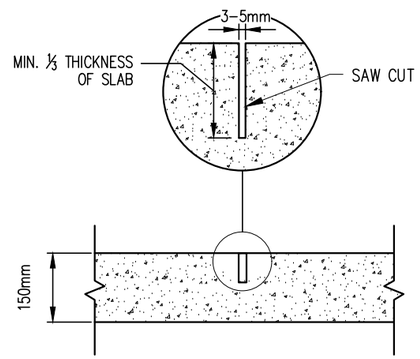

TYPE B
TRANSVERSE CONTRACTION JOINT

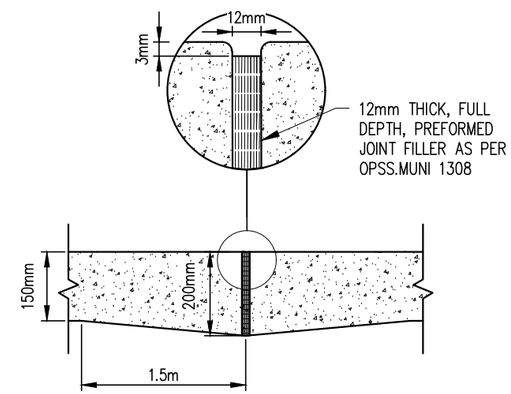

TYPE C
CONSTRUCTION JOINT

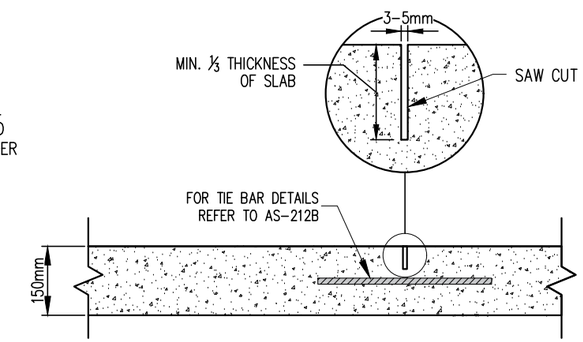

TYPE D
LONGITUDINAL JOINT WITH TIE BAR

NOTES:

1. SPACING OF TYPE B TRANSVERSE CONTRACTION JOINTS SHALL NOT EXCEED 4.88m, MIN. 3.66m.
2. WHEN A JOINT OCCURS WITHIN 1.50m OF, OR CONTACTS A CATCH BASIN MANHOLE OR UTILITY VALVE, SHORTEN ONE OR MORE PANELS EITHER SIDE OF OPENING TO PERMIT JOINT TO FALL ON CENTRE OF STRUCTURE.
3. ANGLES BETWEEN PAVEMENT JOINTS MUST NOT BE LESS THAN 45°.
4. CATCH BASINS, UTILITY MANHOLES, UTILITY VALVES, ETC. SHALL BE ISOLATED AS PER AS-213.
5. SELF LEVELING MAINTENANCE HOLE FRAME & COVER SHALL BE USED IN CONCRETE PAVEMENT, WHERE POSSIBLE. REFER TO AS-553.
6. ALL WORK SHALL CONFORM TO CITY OF WINDSOR STANDARD SPECIFICATION S-7 & S-9.

NOT TO SCALE

Mark Winterton
Digitally signed by Mark Winterton
Date: 2024.07.08 12:07:39 -04'00'

CITY OF WINDSOR ENGINEERING DEPARTMENT	
RURAL RESIDENTIAL CONCRETE PAVEMENT	
DR'N BY: AC, AZ	DATE: JAN, 2020
REVISION: JUN, 2024	CH'KD BY(ENG): PM, JH
CH'KD BY(GEO/OPS): PJU, AL	PASSED BY: FM
CITY ENGINEER	AS-227